KCJ

INTER - Closed ventilated ceiling with Capture Jet™ technology

- HACCP* certified (PE-567-HM01I)
- Up to 15% energy savings due to the Capture Jets
- High-efficiency grease removal KSA multi-cyclone filters (UL and NSF classified)
- Alternative: Twin FC filters complying with DIN 18869-5
- Maximum thermal and air quality comfort, excellent visual and acoustic comfort leading to pleasant working environment
- Stylish and perfect finishing
- Easy cleaning and maintenance for optimal hygiene and safety
- Turnkey projects: engineered solution "made in Germany" including installation by Halton specialists
- Full adaptability to developments in the kitchen
- Many customisation opportunities

The KCJ closed ventilated ceiling, with the Capture Jet™ technology, is a flexible and aesthetically pleasing solution that combines several functions: extraction, air supply, lighting, and a suspended ceiling. All components are designed to guarantee optimal hygiene levels and easy maintenance in accordance with HACCP recommendations. The ceiling is suitable for central kitchens but also for all closed cooking areas or show kitchens.

Featuring a closed design and manufactured entirely of stainless steel, the product is equipped with the latest dual Capture Jet™ technology constituting an outer boundary. Combined with a laminar-flow-type make-up air system, it helps to reduce extract air flow rates by at least 15% compared to traditional ventilated ceilings while retaining maximum air quality and comfort for users.

The kitchen space is freed from the canopies volume. The entire kitchen then potentially benefits from the daylight, in addition to the integrated uniform and direct lighting. The visual comfort and the impression of space are incomparable. Also, the kitchen ceiling system provides excellent fire protection, limiting the spreading of fire in the building.

Extraction plenums are equipped with KSA high-efficiency cyclonic filters. They are designed such that their number and location can be adjusted to suit any development of the kitchen space. Depending on the local regulations, they can be replaced by high efficiency twin FC filters which prevent, in case of fire, the flames entering the exhaust plenum (complying with DIN 18869-5).

* Hazard Analysis Critical Control Point

KCJ/1103/UK

Operation

Cooking equipment generates large plumes of hot air, loaded with aerosols: grease solid, grease vapours, water, odours, burned components etc. These plumes or convective flows (1) naturally rise towards the kitchen ceiling.

While the absence of containment screens on a kitchen ceiling completely releases the volumes, providing unrivalled working comfort, the convective flows are left to their own life. The combination of the Capture Jets (2) and the laminar-flow air supply (3) allows convective flows to rise freely and be removed by the extraction plenum as quickly as possible, without mixing with the fresh air that is brought into the kitchen.

The KCJ kitchen ceiling system is a closed type. All extraction plenums are connected to the extract ductwork in order to guarantee absolute hygiene. There is no contact between the cooking vapours and the building's structure or with services situated above the kitchen ceiling. Through its type of construction, the kitchen ceiling protects building structures against fire. All components in the extraction areas are made from AISI 304 stainless steel with a minimum thickness of 1 mm, for a 30 minutes fire protection by construction (specific requirements of the local regulations still apply).

Extraction plenums and ductwork connections are carefully designed and dimensioned to provide maximum flexibility for future modifications to the layout of the cooking area.

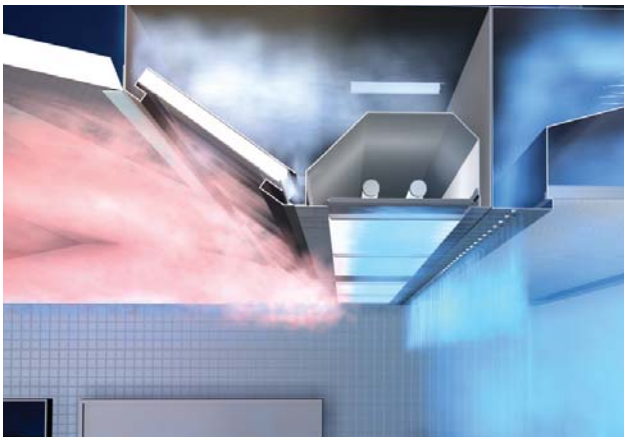

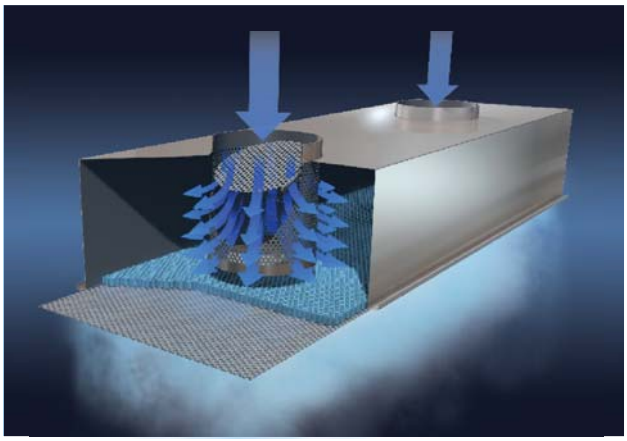

KCJ/1103/UK

Double and peripheral Capture Jet™ technology (patented)

- 15% greater efficiency than traditional ceilings
- Increased capture and containment capacity
- Elimination of the risk of cooking vapour re-circulation
- Energy savings with optimal air quality

The Capture Jet™ technology consists of two sets of nozzles, one vertical and one horizontal.
- The horizontal nozzles push vapours back towards the extraction plenum.
- The vertical nozzles increase the containment volume and prevent vapours escaping from cooking areas and entering re-circulation with the fresh air.

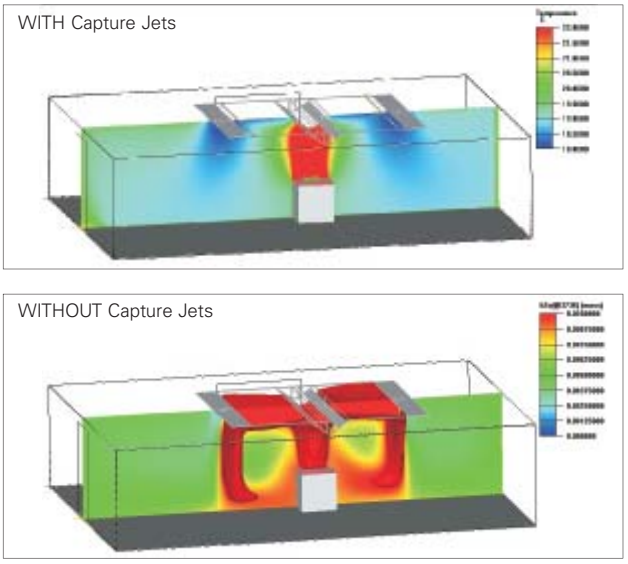

Example of ceiling CFD. WITHOUT the Capture Jets, the thermal plumes are not removed immediately and spread along the ventilated ceiling to finally be re-circulated with the fresh air introduced into the kitchen through the supply units.

Laminar-flow air supply modules

- Completely draught-free compensation control
- A masterpiece for a high comfort level for users

The air supply modules are designed to spread fresh air through the kitchen at extremely low velocity . The absence of draughts not only helps to avoid dispersing convective flows from the cooking equipment but also guarantees user comfort.

The modules comprise of a distribution cylinder, which enables flow velocity to be reduced and fresh air to be uniformly distributed in the plenum. The flow is then streamlined, due to the combination of a honeycomb structure and a perforated front.

The honeycomb structure reduces the induction phenomenon common to all supply units. This phenomenon generate a suction effect along their periphery. It leads to the mixing or recirculation, inside the units, of a small amount of room polluted air with the fresh air blown. The air quality is therefore improved and the front faces of the units are kept clean for longer.

The honeycomb structure contributes also to reduce the sound pressure level due to its resonance sound absorbing property.

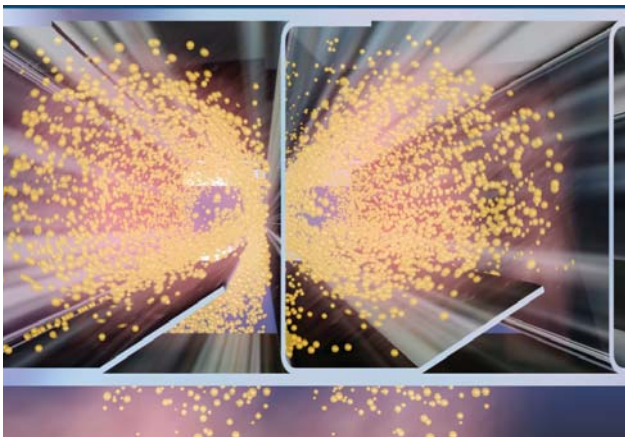

KCJ/1103/UK

Comfort limit height

- Total control of air quality in the working area
- Wellbeing and productivity

The laminar-flow air supply modules allow the kitchen air to be renewed on the principle of air displacement. Fresh air naturally drops to low level and fills the working area from that level. The absence of flow turbulences prevents this fresh air from mixing with convective flows from the cooking equipment.
A comfort limit naturally appears in the kitchen's environment through stratification. The Halton ceilings are designed such that this limit point is above head level. Below the limit height, air quality is optimal. The polluted air above is extracted through the kitchen ceiling system.

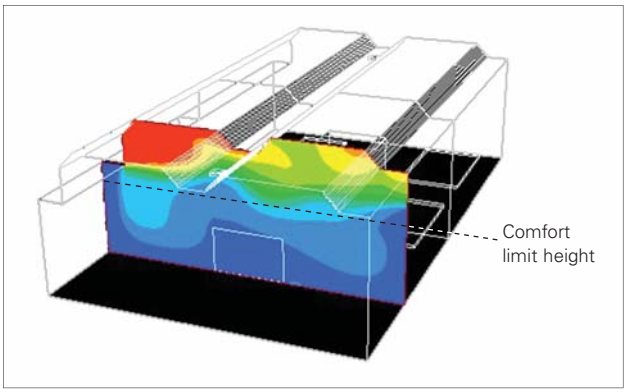

Example of ceiling CFD with the most efficient association: Capture Jet™ technology and low displacement units installed in the occupied zone. The capture of the thermal plumes is at its maximum level while the users comfort is ideal.

KSA cyclonic filters

- High grease filtration efficiency minimizes grease deposit in exhaust ductwork
- Hygiene and safety

The KSA cyclonic filters is made of multiple honeycomb profiles. This special shape forces the air to swirl inside the profiles. The centrifuge effect is significant and, above all, continuous – especially in comparison to the action of traditional filters. Particles are thus pushed against the profiles. The collected condensation flows naturally towards the extraction plenum drains.
The KSA filters are 95% efficient for the removal of 10 µm particles. They are UL-accredited as flame-resistant (Underwriter Laboratories) and have NSF hygiene and safety approval (National Sanitation Foundation, USA).

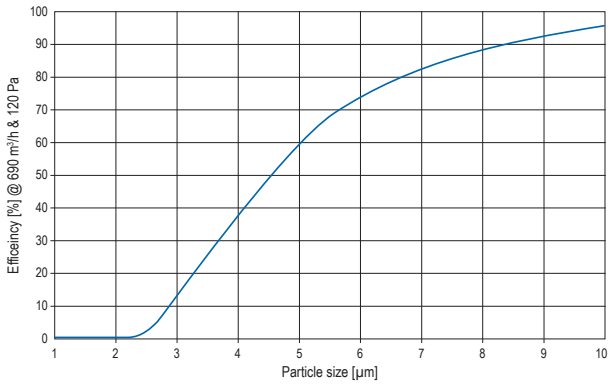

Efficiency curve of the KSA cyclonic filters based on the VDI 2052 method (part 1) «Ventilation Equipment for kitchens. Determination of Capture Efficiency of Aerosol Separators in Kitchen Exhaust»

KCJ/1103/UK

FC twin filters for specific fire requirements

- Minimisation of grease deposits in the ducts
- Hygiene and total fire safety
- Complies with DIN 18869-5

The twin FC filter is a combination of 2 FC filters. It is therefore composed of 4 layers. This construction generates a high centrifugal effect, allowing a very effective separation of the cooking emissions. The grease deposits inside the ductwork are then significantly reduced.
The Twin FC filter complies also with DIN 18869-5 and, in the event of fire, prevents the flames entering the exhaust plenum and therefore prevents the fire spreading through the kitchen ductwork and, therefore, the building.

The TFC filters are 96% efficient in removal of 10 µm particles. FC twin filters are easy to handle and are dishwasher compatible.

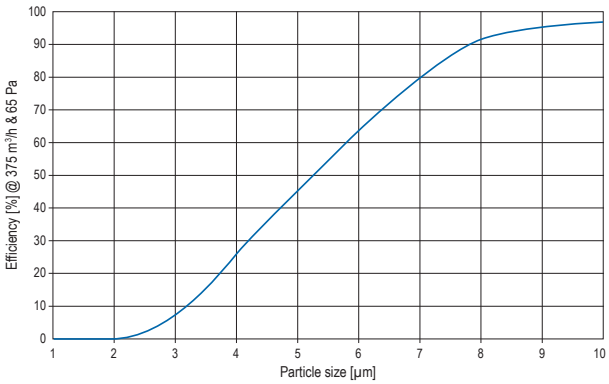

Efficiency curve of the FC twin filters based on the VDI 2052 method (part 1) «Ventilation Equipment for kitchens. Determination of Capture Efficiency of Aerosol Separators in Kitchen Exhaust»

Maintenance

- Components that are easy to access and clean
- Maximum hygiene and quick maintenance

All Capture Jet™ closed ventilated ceilings are designed to reduce the number of external stainless steel components thus reducing the number of joints to be cleaned for maximum hygiene. The joints of the lower edge are fully welded to be liquid-tight. The arched shape of the panels between extraction plenums is aerodynamically designed to limit the condensation risk.

In addition, the arched shape of the panels between extraction plenums has been designed to prevent cooking vapours passing into the ceiling and also to facilitate its maintenance.

Testing And Balancing (T.A.B.™) taps allow fast control of the exhaust and supply airflows during the commissioning phase or maintenance operations during the life cycle of the kitchen.

The laminar flow units avoid the re-circulation of polluted air with the make-up air, avoiding the grease deposits on the cooking appliances, the floors (slippery floors lead to high risk of falls) and the building structure.

All these features give to the KCJ ventilate ceiling one of the highest levels of hygiene, safety and ease of maintenance.

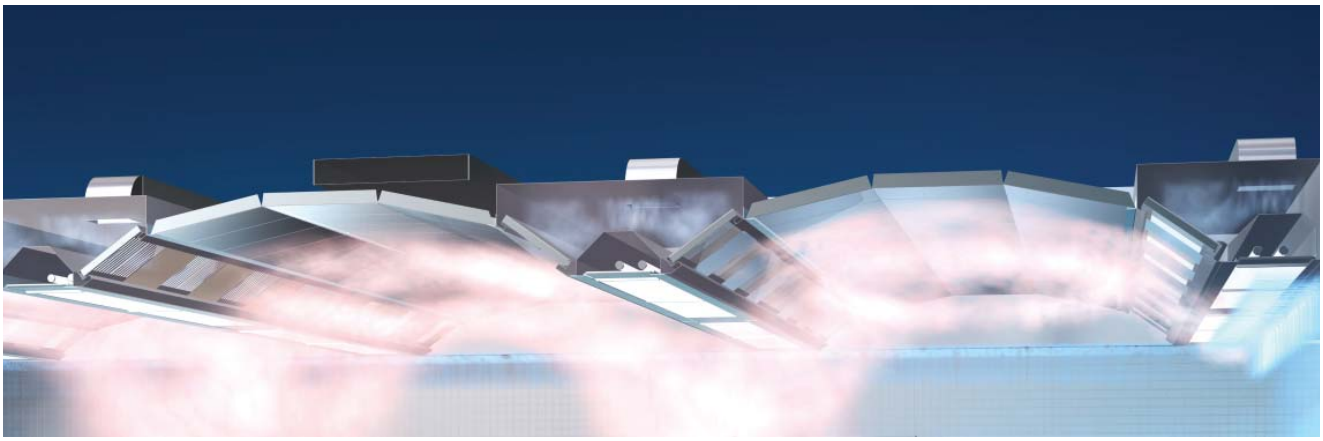

KCJ/1103/UK

Arched design

- Better containment capacity
- An aesthetically pleasing ceiling
- Easier maintenance and improved hygiene

The arched shape of the panels between extraction plenums increases the containment volume. Peak vapour emissions are held there before being aerodynamically directed towards the extraction plenum.

The arches are designed to fit together with an overlap leading to a good airtightness level. The neutral sheets are fixed in place with special L profiles. Arches and sheets remain perfectly in place during cleaning operations, without risk of accidental lifting. These assembly provisions also prevent cooking vapours passing into the ceiling.
All of the components can be disconnected, and the system can be reassembled without tools, for quick and easy maintenance and access to the void above the ceiling.

Lighting

- Uniform lighting
- Great visual comfort for users

With five models to choose from, the lights can be uniformly distributed throughout the kitchen area, whatever the kitchen ceiling configuration. All models are equipped with electronic ballasts and use a Siteco power rail system, enabling the number of lights that are switched on to be adjusted, adding to the energy savings of the system. The lighting is uniform and suited to activity in the kitchen, for improved visual comfort for users.

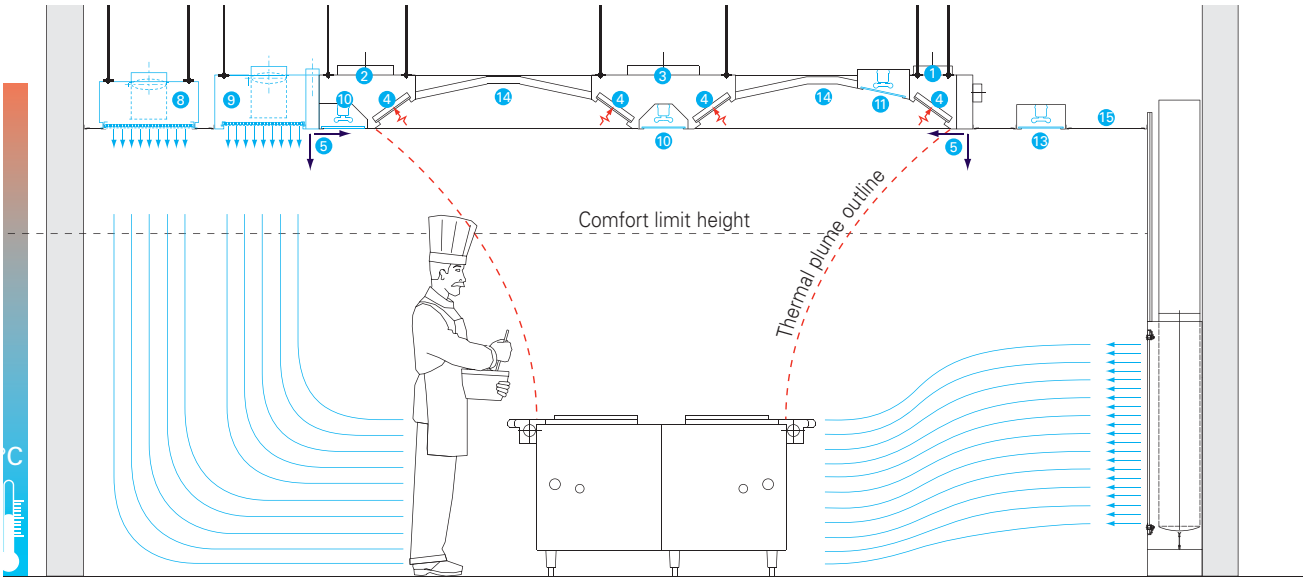

KCJ/1103/UK

General principles

- Extraction plenums constructed from AISI 304 stainless steel, 320 grain, with no visible screws and rivets. T.A.B.™ (Testing And Balancing) ports for pressure testing and air flow rate reading easing proper extract airflow balancing within the area. Flanges with 1.5 mm welded seam and plenum body with 1 mm.

1 - Single plenum
2 - Single plenum with integrated light fitting
3 - Double plenum with integrated light fitting

- High-efficiency KSA cyclonic filters, accredited as flame-resistant, easily dismantled and cleaned by machine. Constructed of AISI 304 stainless steel, constant pressure drop.

4 - KSA cyclonic filters: 500 x 250 x 50 mm

- Ventilated ceilings equipped with double Capture Jet™ technology and peripherals. Modular construction of AISI 304 stainless steel, 320 grain, with no visible screws and rivets.

5 - Capture Jet™ module
6 - Arched Capture Jet™ module with integrated Capture Jet™ fan

- Pinpoint extraction plenum constructed from AISI 304 stainless steel, equipped with high efficiency FC filters. T.A.B.™ (Testing and Balancing) ports for pressure testing for direct control of air flow rates.

7 - Pinpoint extraction plenum

- Laminar-flow supply units. Constructed from AISI 304 stainless steel, 320 grain, with no visible screws and rivets. Stainless steel or aluminium perforated front face, equipped with a honeycomb structure.

8 - Laminar flow supply unit
9 - Unit combined with a Capture Jet™ module

- Twin-tube lights, IP54, laminated glass 6 mm thick with plastic divider. Three-phase power rail system.

10 - Light fitting integrated into the extraction plenums
11 - Light fitting integrated into the arches between plenums
12 - Light fitting integrated into the panels between plenums
13 - Light fitting integrated into neutral zones

- 14 - Flat or arched ceiling between plenums: standard construction in AISI 304 stainless steel, 320 grain.

- 15 - Passive areas (outside cooking areas): standard construction of aluminium pads or panels supported by aluminium profiles, with lights or integrated spotlights. As an option, aluminium pads or panels can be powder coated (standard white RAL 9010, other colours on request) or constructed from stainless steel.

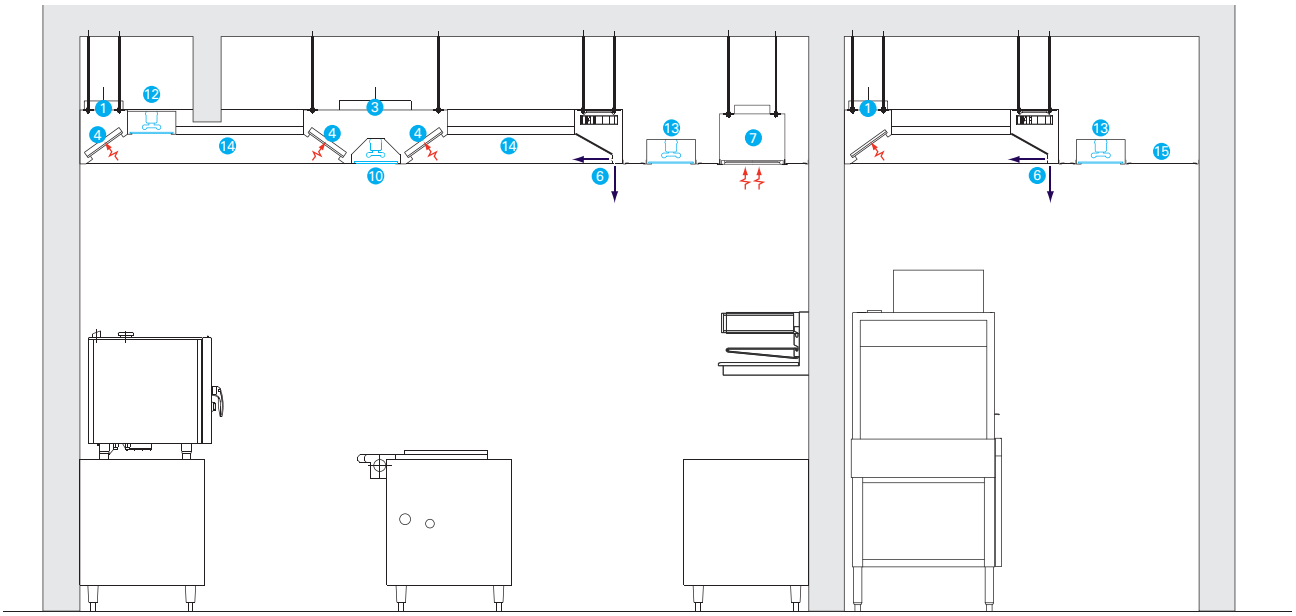

KCJ/1103/UK

Construction and components

The following information and drawings relate to standard construction and components. They can be adapted to suit specific requirements or specific installation conditions.

Extraction plenums

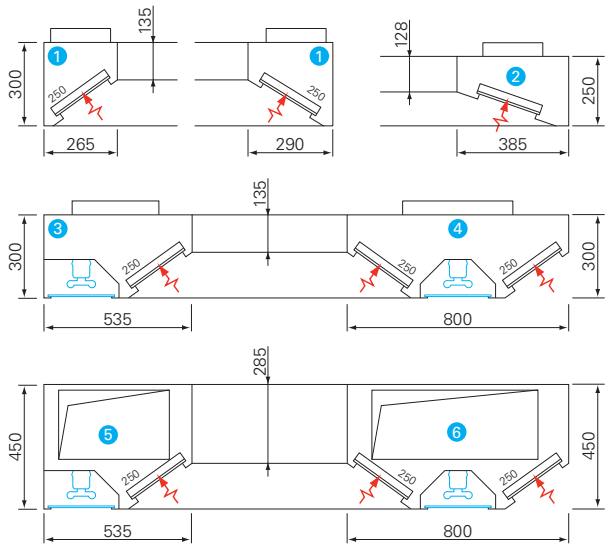

Constructed from AISI 304 stainless steel, 320 grain, with no visible screws and rivets. Strong side flanges, with a thickness of 1.5 mm. Welded seam for perfect rigidity and waterproofing. T.A.B.™ port for pressure testing for quick and reliable control of air flow rates.

1 - EP/S – standard single plenum without light fitting
2 - EP/SF – extra-flat single plenum without light fitting
3 - EP/SL – standard single plenum with light fitting
4 - EP/DL – standard double plenum with light fitting
5 - EP/SLC – single plenum with side duct connection and light fitting
6 - EP/DLC – double plenum with side duct connection and light fitting

Maximum plenum length: 3,500 mm
Longer lengths are obtained by on-site joining on of plenums together .

Standard filter height: 250 mm
Other heights (and exhaust airflow capacities) available on request.

Installation height (plenum base)

Floor surface area	Minimum	BGN*
< 50 m²	2 300 mm	2500 mm
51–100 m²	2 500 mm	2750 mm
101–200 m²	2 500 mm	3000 mm
> 200 m²	2 500 mm	3250 mm

* Installation heights recommended by BGN (a German-based institution for food processing and restaurant operations)

Pinpoint exhaust plenum

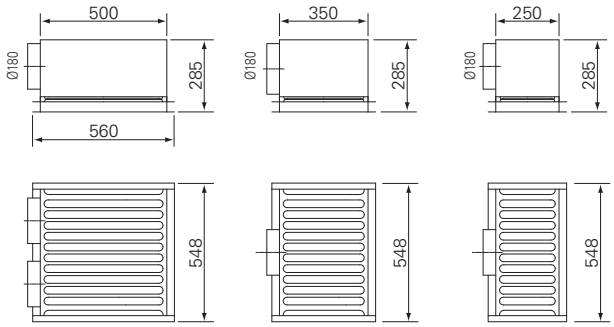

Maximum lentgh: 3,500 mm (7 filters)

Extraction plenums are intended to handle small-sized cooking equipment with low emission levels and located outside the cooking area covered by the kitchen ceiling (the active area), such as small broilers, small steam ovens, and induction hotplates.

Plenum in galvanised steel. High efficiency FC filters constructed from AISI 304 stainless steel, mirror polished, 1 mm thickness. Closure trim in anodised aluminium. Three sizes available:

1 - EP/B50 – FC filter, 500 x 500 mm, 600 m^3/h max. @ 55 Pa

2 - EP/B35 – FC filter, 500 x 350 mm, 450 m^3/h max. @ 55 Pa

3 - EP/B25 – FC filter, 500 x 250 mm, 300 m^3/h max. @ 55 Pa

Option :

Other diameter connections

Capture Jet™ system (patent pending)

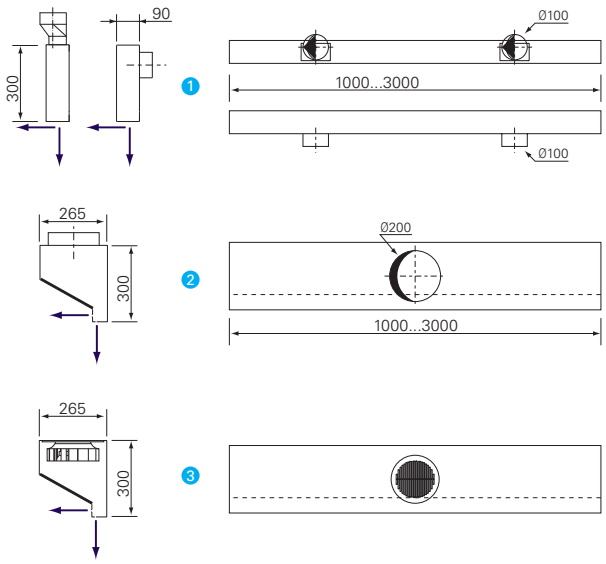

Standalone Capture Jet™ modules

Constructed from AISI 304 stainless steel, of 1 mm thickness. Two sets of nozzles, one vertical and one horizontal.

1 - CJ/B – Capture Jet™ module

2 - CJ/D – Arched Capture Jet™ module

3 - CJ/DM – Arched Capture Jet™ module with integrated Capture Jet™ fan

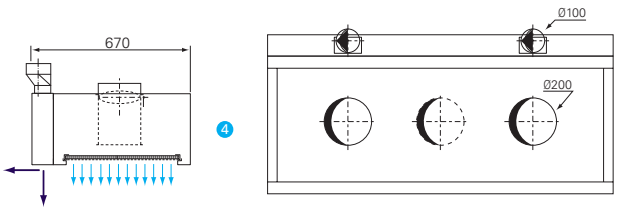

Capture Jet™ modules combined with a laminar-flow module

Design of the laminar-flow unit similar to the units described herefater. Capture Jet™ module constructed from AISI 304 stainless steel, of 1 mm thickness. Two sets of nozzles, one vertical and one horizontal.

4 - CJ/C – Laminar-flow supply module combined with Capture Jet™ module

Active ceilings (extraction areas)

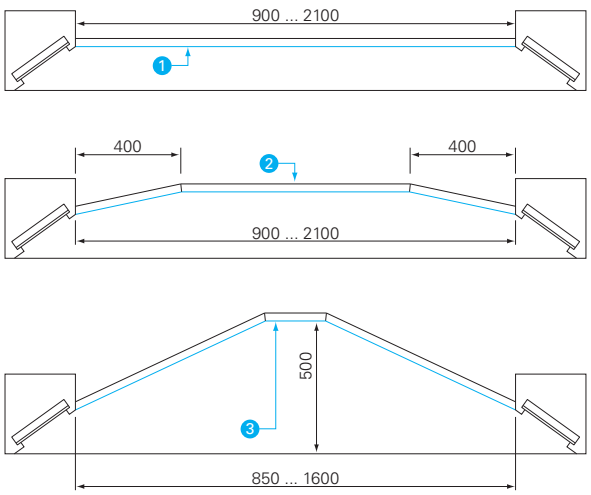

Standard construction in AISI 304 stainless steel, 320 grain, 1 mm thickness. Three panel types available:
1 - AC/F – stainless steel flat ceiling (aluminium optional)
2 - AC/D – stainless steel arched ceiling
3 - AC/HC – arched ceiling with high containment volume (For cooking equipment with high emissions or use in the food-processing industry)

Options:
Panels powdercoated (standard white RAL 9010, other colours on request) or constructed from stainless steel.

Laminar-flow air supply modules

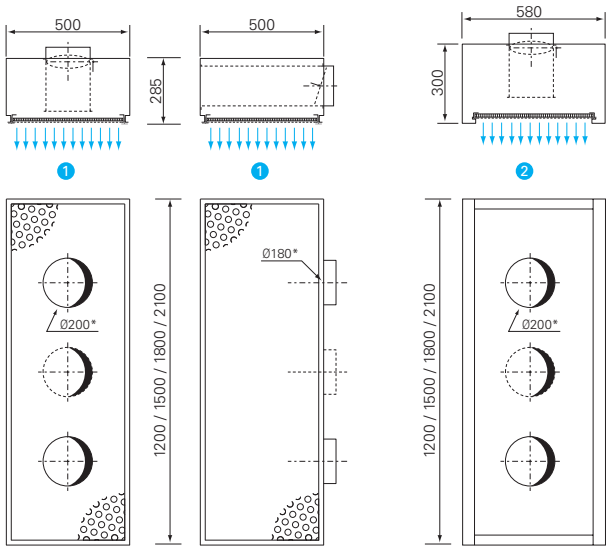

* The number of spigots depends on the exhaust airflow per unit and can be adjusted to limit the speed through the connections and therefore the sound pressure level.

1 - LF/A – Modular laminar-flow module
2 - LF/S – Standalone laminar-flow module

• Modular laminar-flow module:
Designed to be integrated in a neutral ceiling of the panel system type. Plenum in galvanised steel. Tubular flow rate distribution system in perforated galvanised steel. Integrated balancing plate. Anodised aluminium front face with a honeycomb structure. Surrounding frame in anodised aluminium. Anti-vibration fixing brackets.

• Standalone stainless steel laminar flow module:
Design identical to the single air supply module. Plenum in AISI 304 stainless steel, 320 grain.

Options:
- Ø248 and 313 mm connections
- Facing in powdercoated aluminium (standard white RAL 9010, other colours on request)
- Facing in brushed stainless steel (standalone laminar-flow module) or powdercoated stainless steel (standard white RAL 9010, other colours on request)
- External thermal insulation

Light fittings

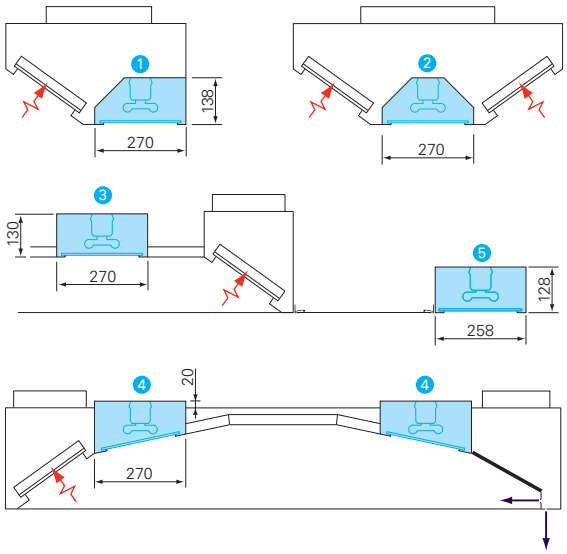

Twin-tube lights, IP54, laminated safety glass 6 mm thick. Electronic ballast and three-phase power rail system.

1 - IL/EP – standard single plenum with light fitting
2 - IL/EP – double plenum with light fitting
3 - IL/FC – light fitting flush with the flat ceiling
4 - IL/DC – light fitting flush with the arched ceiling
5 - IL/NA – light fitting flush with the neutral ceiling

The Siteco system allows the kitchen lighting to be adjusted by means of a three-phase power rail system, which allows one light in three (walk through lighting for nights), two in three, or all lighting switched on simultaneously.

Options:
IP65 protection, T5 lighting units

Neutral ceilings

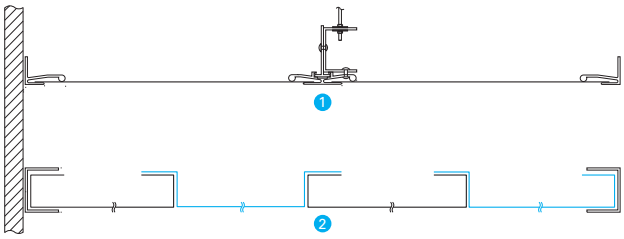

Neutral ceilings in areas without cooking equipment.

1 - Panel system, with aluminium profile brackets
2 - Pads system, with aluminium angle brackets

NC/PLA – aluminium pads (1)
NC/PAA – aluminium panels (2)
NC/PAS – stainless steel panels (2)

Options:
- Pads or panels powdercoated (standard white RAL 9010, other colours on request) or constructed from stainless steel.
- Stainless steel angles (panel system)
- Soundabsorbing material (panel system)

KSA cyclonic filters

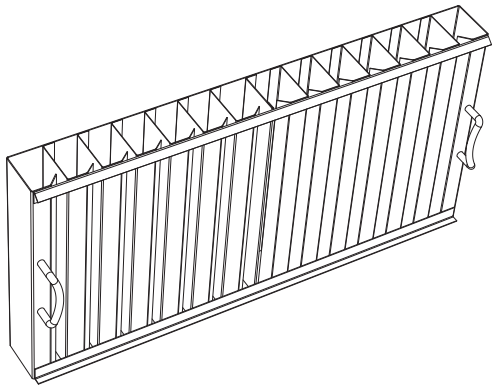

Recommended air flow	
Rate per filter (250 mm)	500 < Qe < 690 m^3/h
Pressure drop	65 < ΔP < 120 Pa

Constructed from AISI 304 (1.4301) polished stainless steel, with constant pressure loss and two handles. Grease removal efficiency of 95% @120 Pa for particles a diameter of 10 microns or larger.

Flame-resistant filter accredited by the UL laboratory and with NSF hygiene and safety approval. Inclined filters to ensure good condensation removal, reduce the risk of fire, and guarantee perfect hygiene in cooking areas.

Twin FC filters

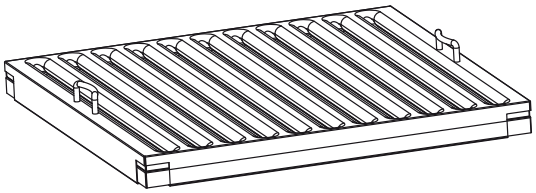

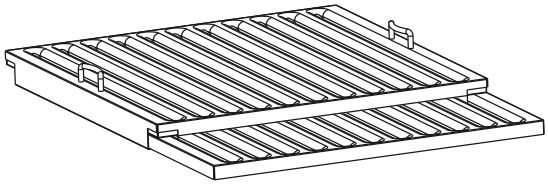

Recommended air flow	
Rate per filter (250 mm)	200 < Qe < 350 m³/h
Pressure drop	30 < ΔP < 55 Pa

Constructed from AISI 304 (1.4301) mirror-polished stainless steel, with constant pressure loss and two handles. Grease removal efficiency of 96% @65 Pa for particles a diameter of 10 microns or larger.

The twin FC is a combination of 2 FC filters and therefore is composed of 4 layers. This construction leads to a high centrifugal effect, allowing very effective separation of the cooking appliances emissions. It complies also with DIN 18869-5, thus preventing, in the event of fire, the flames from entering the exhaust plenum and therefore preventing the fire spreading through the kitchen ductwork and, therefore, the building.

Quick selection data

Code	Description	Standard length [mm]	Pitch [mm]	Recommended air flow rates*	[m³/h/ml]	[l/s/ml]
EP/S	Single extraction plenum	1000...3500	500	KSA	1000...1380	278...383
			500	TFC	400...700	111...194
EP/D	Double extraction plenum	1000...3500	500	KSA	2000...2760	556...767
			500	TFC	800...1400	222...389
CJ/C	Combined air supply and Capture Jet™ module	1000	-		750...1000	208...278
CJ/B	Capture Jet™ module	1000...3500	500		20...30	6..8
LF/A	Laminar air supply module	1000	-		400...1000	111...278

* For 250 mm height filters

Ventilated ceiling weight: CNS 30 kg /m², aluminium 25 kg/m²

EXHAUST **Pressure drop, sound data and airflow measurement**

Generalities

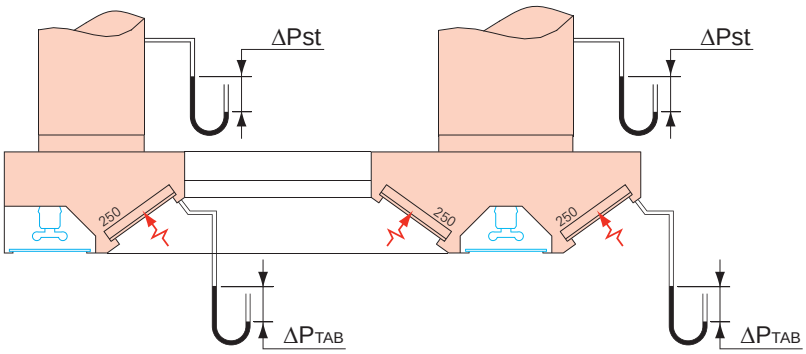

ΔP_{st} =Total static pressure drop, damper open (Pa)
ΔP_{TAB} = T.A.B.™ static port for pressure testing to control flow during the commissioning (Pa)
Lp(A) = Level of noise pressure, in dB(A), with damper open and room attenuation ΔLr of 8 dB

ΔPst is given at a speed in the duct of between 3 and 5 m/s with rectangular spigots. The recommended speed for obtaining a uniform pressure and a good flow distribution over the length of the extraction plenum is 3 m/s.

ΔP_{st} / Total static pressure drop per extraction plenum:

The maximum length of an extraction plenum is 3,500 mm. Longer lengths are obtained by connecting several plenums. The maximum number of filters per plenum varies from seven (single extraction plenum) to 14 (double extraction plenum).
To calculate the total pressure drop for each extraction plenum, the total flow rate must be divided by the number of filters. The tables hereafter give the total pressure drop.

ΔP_{TAB} / Measurement and control of the extract flow per exhaust plenum:

Each extraction plenum is equipped with a T.A.B.™ port for pressure testing. The pressure value measured enables calculating the flow extracted per filter by means of the following formula and k factors presented in the tables hereafter:

$qv = k \times \sqrt{\Delta P_{TAB}}$

qv = exhaust airflow per filter
k = exhaust airflow calculation factor
ΔP_{TAB} = T.A.B.™ pressure for airflow rate measurement

The extract flow per extraction plenum is obtained by multiplying the flow per filter by the number of filters.

Sound pressure level per exhaust plenum:

The method is the same as that used for calculating the pressure drop. The value for flow per filter enables determination of a filter's sound pressure level by consulting the tables hereafter. The total sound level pressure of a single or double extraction plenum is obtained by using the correction factors in the table opposite.
Lp(A) plenum = Lp(A) filter + Correction

Sound pressure correction factors

Number of filters	1	2	3	4	5	6	7
Correction	0.0	3.0	4.8	6.0	7.0	7.8	8.5

Number of filters	8	9	10	11	12	13	14
Correction	9.0	9.5	10.0	10.4	10.8	11.1	11.5

EXHAUST Pressure drop, sound data and airflow measurement

Single exhaust plenum / KSA filters (250 mm)

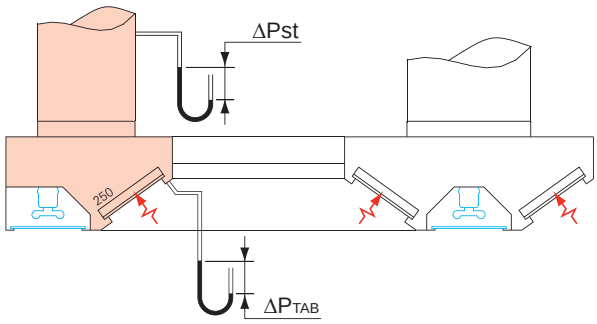

Double exhaust plenum / KSA filters (250 mm)

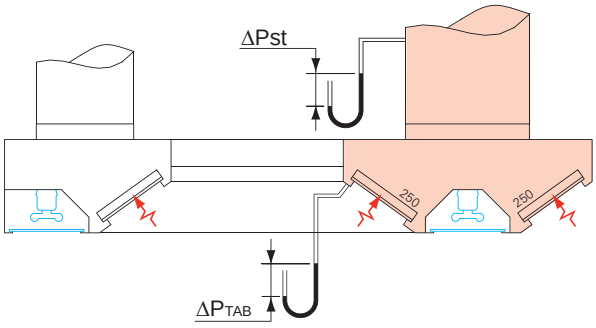

ΔP_{st} = Exhaust plenum static pressure loss with a damper opening at 100%

ΔP_{TAB} = T.A.B.™ pressure for airflow rate measurement

Static pressure drop, associated T.A.B.™ reading and sound pressure level data per filter

Extraction rate per filter [m³/h]	[l/s]	SINGLE exhaust plenum Static pressure loss ΔP_{ST}* [Pa] 3 m/s	4 m/s	5 m/s	DOUBLE exhaust plenum Static pressure loss ΔP_{ST}* [Pa] 3 m/s	4 m/s	5 m/s	Associated T.A.B.™ reading ΔP_{TAB} [Pa]	Sound pressure level per filter Lp(A)** [dB(A)]
400	111	66	85	110	58	72	90	40	38
450	125	76	96	121	69	83	101	51	40
500	139	88	108	133	81	95	113	63	43
550	153	101	121	146	94	108	126	76	45
600	167	116	136	161	109	123	141	91	47
650	181	132	151	176	124	138	156	106	49
690	192	145	165	190	138	152	170	120	51
750	208	167	187	212	160	174	192	142	53

* Damper open, with a speed through the connection(s) varying from 3 to 5 m/s

** Damper open, room attenuation ΔLr = 8 dB

It is recommended to dimension the size of the connections based on a speed of 3 m/s and determine the number of filters needed to get a T.A.B.™ reading of 80 Pa (in any case between 50 Pa to 120 Pa).

Exhaust airflow measurement with T.A.B.™ ports

The T.A.B.™ pressure ports allow a quick check on site of the exhaust airflow per filter during the commissioning of the ventilated ceilings. After having measured the T.A.B.™ pressures, the exhaust airflow can be calulated with the following formula:

$qv = k \times \sqrt{\Delta P_{TAB}}$ [Pa] k = 63 [m³/h] k = 17.5 [l/s]

To determine directly the total exhaust airflow of the entire exhaust plenum, the following k factors can be used.

Number of filters	k factor [m³/h]	k factor [l/s]
1	63	17.5
2	126	35
3	189	52.5
4	252	70
5	315	87.5
6	378	105
7	441	122.5

Number of filters	k factor [m³/h]	k factor [l/s]
8	504	140
9	567	157.5
10	630	175
11	693	192.5
12	756	210
13	819	227.5
14	882	245

EXHAUST Pressure drop, sound data and airflow measurement

Single exhaust plenum / FC filters (250 mm)

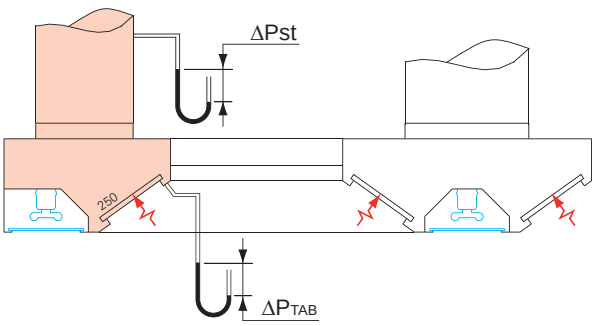

Double exhaust plenum / FC filters (250 mm)

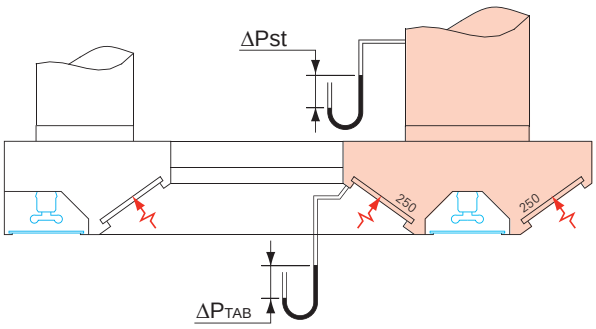

ΔP_{st} = Exhaust plenum static pressure loss with a damper opening at 100%

ΔP_{TAB} = T.A.B.™ pressure for airflow rate measurement

Static pressure drop, associated T.A.B.™ reading and sound pressure level data per filter

Extraction rate per filter		SINGLE exhaust plenum Static pressure loss ΔP_{ST}* [Pa]			DOUBLE exhaust plenum Static pressure loss ΔP_{ST}* [Pa]			Associated T.A.B.™ reading ΔP_{TAB}	Sound pressure level per filter Lp(A)**
[m³/h]	[l/s]	3 m/s	4 m/s	5 m/s	3 m/s	4 m/s	5 m/s	[Pa]	[dB(A)]
100	28	29	48	73	21	35	53	3	-
150	42	33	52	78	26	40	58	8	26
200	56	39	58	83	31	45	63	13	31
250	69	46	66	91	39	53	71	21	38
300	83	56	75	100	48	62	80	30	46
350	97	66	86	111	59	73	91	41	53
400	111	79	99	124	72	86	104	54	60
450	125	93	113	138	86	100	118	68	67

* Damper open, with a speed through the connection(s) varying from 3 to 5 m/s

** Damper open, room attenuation ΔLr = 8 dB

It is recommended to size the connections based on a speed of 3 m/s and determine the number of filters needed to get a T.A.B.™ reading of 30 Pa (in any case between 15 Pa to 40 Pa).

Exhaust airflow measurement with T.A.B.™ ports

The T.A.B.™ pressure ports allow a quick check on site of the exhaust airflow per filter during the commissioning of the ventilated ceilings. After having measured the T.A.B.™ pressures, the exhaust airflow can be calulated with the following formula:

$qv = k \times \sqrt{\Delta P_{TAB}}$ [Pa] k = 54.5 [m³/h] k = 15.1 [l/s]

To determine directly the total exhaust airflow of the entire exhaust plenum, the following k factors can be used.

Number of filters	k factor [m³/h]	k factor [l/s]
1	54.5	15.2
2	109	30.2
3	163.5	45.3
4	218	60.4
5	272.5	75.5
6	327	90.6
7	381.5	105.7

Number of filters	k factor [m³/h]	k factor [l/s]
8	436	120.8
9	490.5	135.9
10	545	151
11	599.5	166.1
12	654	181.2
13	708.5	196.3
14	763	211.4

EXHAUST Pressure drop, sound data and airflow measurement

Single exhaust plenum / Twin FC filters (250 mm)

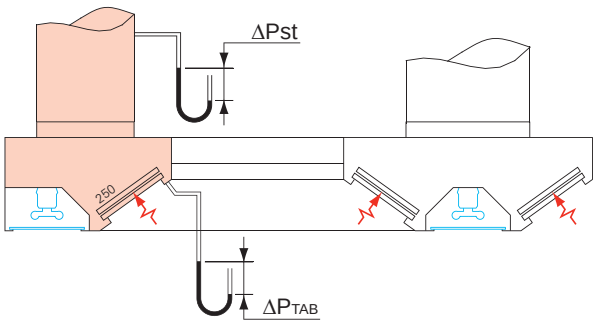

Double exhaust plenum / Twin FC filters (250 mm)

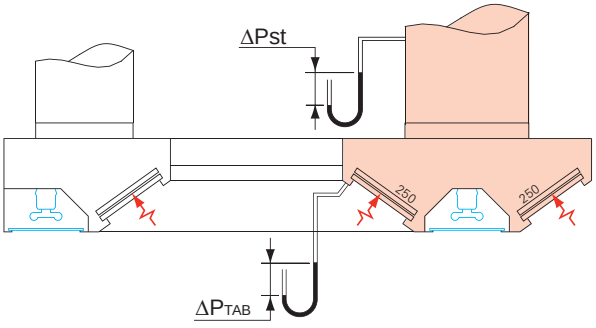

ΔP_{st} = Supply static pressure loss with a damper opening at 100%

ΔP_{TAB} = T.A.B.™ pressure for airflow rate measurement

Static pressure drop, associated T.A.B.™ reading and sound pressure level data per filter

Extraction rate per filter [m³/h]	[l/s]	SINGLE exhaust plenum Static pressure loss ΔP_{ST}* [Pa] 3 m/s	4 m/s	5 m/s	DOUBLE exhaust plenum Static pressure loss ΔP_{ST}* [Pa] 3 m/s	4 m/s	5 m/s	Associated T.A.B.™ reading ΔP_{TAB} [Pa]	Sound pressure level per filter Lp(A)** [dB(A)]
150	42	36	55	81	29	43	61	11	28
200	56	44	64	89	37	51	69	19	33
250	69	55	74	99	47	61	79	29	40
300	83	68	87	112	60	74	92	42	48
350	97	83	102	128	76	90	108	58	55
375	104	91	111	136	84	98	116	66	59
400	111	100	120	145	93	107	125	75	62

* Damper open, with a speed through the connection(s) varying from 3 to 5 m/s

** Damper open, room attenuation ΔLr = 8 dB

It is recommended to size the connections based on a speed of 3 m/s and determine the number of filters needed to get a T.A.B.™ reading of 40 Pa (in any case between 30 Pa to 65 Pa).

Exhaust airflow measurement with T.A.B.™ ports

The T.A.B.™ pressure ports allow a quick check on site of the exhaust airflow per filter during the commissioning of the ventilated ceilings. After having measured the T.A.B.™ pressures, the exhaust airflow can be calulated with the following formula:

$qv = k \times \sqrt{\Delta P_{TAB}}$ [Pa] k = 46.1 [m³/h] k = 12.8 [l/s]

To determine the total exhaust airflow of the entire exhaust plenum, the following k factors can be used.

Number of filters	k factor [m³/h]	k factor [l/s]
1	46.1	12.8
2	92.2	25.6
3	138.3	38.4
4	184.4	51.2
5	230.5	64
6	276.6	76.8
7	322.7	89.6

Number of filters	k factor [m³/h]	k factor [l/s]
8	368.8	102.4
9	414.9	115.2
10	461	128
11	507.1	140.8
12	553.2	153.6
13	599.3	166.4
14	645.4	179.2

EXHAUST Pressure drop, sound data and airflow measurement

Pinpoint exhaust plenum, vertical connection(s)
FC filters 250 / 350 / 500

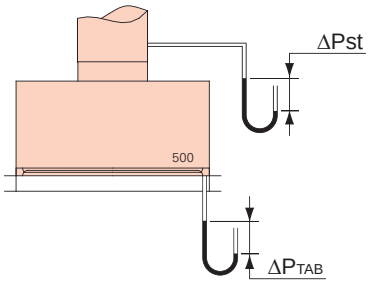

Pinpoint exhaust plenum, horizontal connection(s)
FC filters 250 / 350 / 500

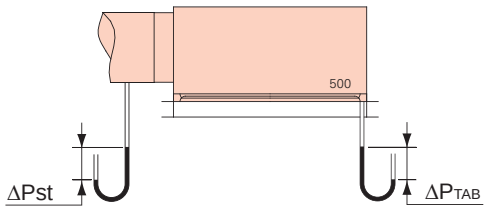

ΔP_{st} = Supply static pressure loss with a damper opening at 100%
ΔP_{TAB} = T.A.B.™ pressure for airflow rate measurement

Static pressure drop, associated T.A.B.™ reading and sound pressure level data per filter

It is recommended to size the connections based on a speed of 3 m/s and determine the number of filters needed to get a T.A.B.™ reading of 40 Pa (in any case between 30 Pa to 65 Pa).

250 mm height FC filter

Extraction rate per filter		VERTICAL connection exhaust plenum Static pressure loss ΔP_{ST}* [Pa]			HORIZONTAL connection exhaust plenum Static pressure loss ΔP_{ST}* [Pa]			Associated T.A.B.™ reading ΔP_{TAB}	Sound pressure level per filter Lp(A)**
[m³/h]	[l/s]	3 m/s	4 m/s	5 m/s	3 m/s	4 m/s	5 m/s	[Pa]	[dB(A)]
100	28	21	35	53	25	42	63	3	-
150	42	26	40	58	29	46	68	8	26
200	56	31	45	63	35	52	73	13	31
250	69	39	53	71	43	59	81	21	38
300	83	48	62	80	52	69	90	30	46
350	97	59	73	91	63	80	101	41	53
400	111	72	86	104	75	92	114	54	60
450	125	86	100	118	90	107	128	68	67

* Damper open, with a speed through the connection(s) varying from 3 to 5 m/s
** Damper open, room attenuation ΔLr = 8 dB

350 mm height FC filter

Extraction rate per filter		VERTICAL connection exhaust plenum Static pressure loss ΔP_{ST}* [Pa]			HORIZONTAL connection exhaust plenum Static pressure loss ΔP_{ST}* [Pa]			Associated T.A.B.™ reading ΔP_{TAB}	Sound pressure level per filter Lp(A)**
[m³/h]	[l/s]	3 m/s	4 m/s	5 m/s	3 m/s	4 m/s	5 m/s	[Pa]	[dB(A)]
200	56	26	40	58	29	46	68	8	26
250	69	30	44	62	34	50	72	12	29
280	78	33	47	65	37	54	75	15	33
300	83	35	49	67	39	56	77	17	35
350	97	42	56	74	45	62	84	24	41
400	111	49	63	81	52	69	91	31	47
450	125	57	71	89	61	77	99	39	53
500	139	66	80	98	70	87	108	48	58

* Damper open, with a speed through the connection(s) varying from 3 to 5 m/s
** Damper open, room attenuation ΔLr = 8 dB

500 mm height FC filter

Extraction rate per filter		VERTICAL connection exhaust plenum Static pressure loss ΔP_{ST}* [Pa]			HORIZONTAL connection exhaust plenum Static pressure loss ΔP_{ST}* [Pa]			Associated T.A.B.™ reading ΔP_{TAB}	Sound pressure level per filter Lp(A)**
[m³/h]	[l/s]	3 m/s	4 m/s	5 m/s	3 m/s	4 m/s	5 m/s	[Pa]	[dB(A)]
300	83	28	42	60	32	49	70	10	27
350	97	32	46	64	36	53	74	14	31
400	111	37	51	69	40	57	79	19	35
450	125	42	56	74	45	62	84	24	40
500	139	47	61	79	51	67	89	29	45
550	153	53	67	85	57	74	95	35	50
590	164	58	72	90	62	79	100	40	53
650	181	67	81	99	71	87	109	49	59

* Damper open, with a speed through the connection(s) varying from 3 to 5 m/s
** Damper open, room attenuation ΔLr = 8 dB

Exhaust airflow measurement with T.A.B.™ ports

The T.A.B.™ pressure ports allow a quick check on site of the exhaust airflow per filter during the commissioning of the pinpoint exhaust plenums. After having measured the T.A.B.™ pressures, the exhaust airflow can be calulated with the following formula:

$qv = k \times \sqrt{\Delta P_{TAB}}$ [Pa]

k factors for 250 mm height FC filter

Number of filters	k factor [m³/h]	k factor [l/s]
1	54.5	15.2
2	109	30.2
3	163.5	45.3
4	218	60.4
5	272.5	75.5

k factors for 350 mm height FC filter

Number of filters	k factor [m³/h]	k factor [l/s]
1	72	20
2	144	40
3	216	60
4	288	80
5	360	100

k factors for 500 mm height FC filter

Number of filters	k factor [m³/h]	k factor [l/s]
1	92.8	25.8
2	185.6	51.6
3	278.4	77.4
4	371.2	103.2
5	464	129

SUPPLY Pressure drop, sound data and airflow measurement

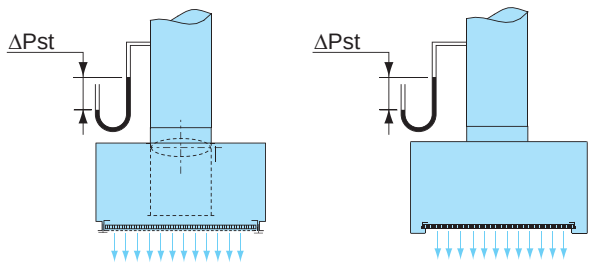

ΔPst = Static pressure loss, damper open (Pa)
LpA = Level of noise pressure, in dB(A), with damper open and room attenuation ΔLr of 8 dB

The recommended flow values to satisfy the VDI 2052 and DIN 18869 recommendations and limit the air velocity in the occupied zone to less than 0.25 m/s are identified by an asterisk (*).

Technical features

Length [mm]	Supply flow rate [m³/h]	[l/s]	ΔP_{ST} [Pa]	Lp(A)** [dB(A)]
1 000	400*	111	11	21
	500*	139	17	25
	600*	167	25	30
	700*	194	34	34
	800	222	44	38
	900	250	56	42
	1000	278	69	46
1 200	500*	139	13	23
	600*	167	18	27
	700*	194	25	31
	800*	222	33	34
	1000	278	51	42
	1200	333	73	48

* Recommended flow to satisfy the VDI 2052 and DIN 18869 standards and limit the air velocity in the occupied zone to less than 0.25 m/s
** Damper open, with a room attenuation ΔLr = 8 dB

Length [mm]	Supply flow rate [m³/h]	[l/s]	ΔP_{ST} [Pa]	Lp(A)** [dB(A)]
1 800	700*	194	13	25
	800*	222	18	28
	900*	250	22	31
	1000*	278	40	39
	1200	333	46	42
	1400	389	54	44
	1600	444	62	47
	1800	500	89	53
2 100	1000*	278	22	31
	1100*	306	27	34
	1200*	333	32	37
	1400*	389	43	41
	1600	444	56	46
	1800	500	71	50
	2000	556	88	53
	2100	583	97	55

* Recommended flow to satisfy the VDI 2052 and DIN 18869 standards and limit the air velocity in the occupied zone to less than 0.25 m/s
** Damper open, with a room attenuation ΔLr = 8 dB

CAPTURE JETS Pressure drop, sound data and airflow measurement

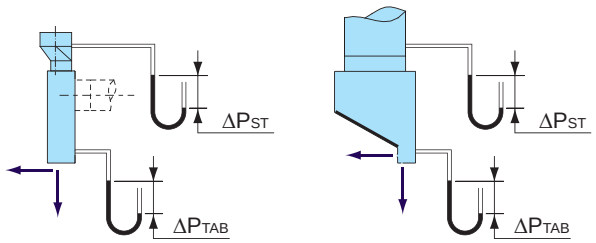

Single Capture Jet™ module (per linear metre):

Maximum length	3,500 mm
Flow	~ 30 m³/h (8.3 l/s)
Static pressure drop	ΔPst ~ 70 Pa

When the Capture Jet modules are connected directly to the supply ductwork, the T.A.B.™ pressure measurement allows the supply airflow to be checked using the following formula:

$q_V = k \times \sqrt{\Delta P_{TAB}}$ [Pa] k = 3,6 [m³/h/ml]
k = 1.0 [l/s/ml]

Suggested specifications

The kitchen cooking area shall be equipped with Halton's Capture Jet™ closed ventilated ceiling of the KCJ type. The Capture Jet™ technology reduces the exhaust airflows by up to 15% while increasing the air quality inside the kitchen. It is manufactured from chrome nickel steel to DIN 18869.

The ventilated ceiling shall be supplied and installed in accordance with Halton's recommendations and plans, and it shall be fully adapted to the room space and cooking appliances configuration. being of the enclosed type, it protects the building structure from germs, mould and bacteria growth for full hygiene and safety. The flow rate for extraction must be based on an accurate calculation of the thermal flow generated by the cooking appliances covered by the ceiling. Accordingly, this calculation must take into account the type of equipment in the cooking area, the energy used by each item, the power of the units in use at any given time, the configuration of the cooking range, and the size of the equipment.

The ventilated ceiling consists of the following elements:

Extraction plenums

Single and double exhaust plenums shall be constructed from chrome nickel steel, material no. 1.4301, one side treated in two-step process (polished with 320 grit and brushed). Minimum thickness of material 1 mm. The extraction plenums must be waterproof and resistant to the acidity of fats. Condensation will be collected in the lower part and removed regularly via a drain. The extraction units will be fitted with KSA-type stainless steel cyclonic filters or fire approved Twin FC filters.

KSA cyclonic filters

The ventilated ceiling shall be equipped with a KSA multi-cyclone stainless steel grease filter. The grease removal efficiency is 95% @120 Pa for particles a diameter of 10 microns or larger, as tested by an independent testing laboratory. The filter shall be NSF and UL classified.

Twin FC filters

The ventilated ceiling shall be equipped with FC twin filters constructed in chrome nickel steel, material no. 1.4301, highly polished. Its construction shall comply with DIN 18869-5 and, in case of fire, prevent flames entering the exhaust plenum. The grease removal efficiency is 96% @65 Pa for particles a diameter of 10 microns or larger.

Double Capture Jets

Double Capture Jets shall be used to increase capture efficiency and the ceiling's containment volume. Capture Jet™ modules must be completely integrated into the ceiling and be equipped with two sets of aerodynamic nozzles, one vertical and one horizontal. The nozzle's output speed will be at least 8 m/s. The Capture Jets used determine the extent of the cooking area covered and will not generate draughts, so as not to disperse convective flows from the cooking equipment. Linear slot system types must not be selected.

Laminar-flow supply modules

The air supply modules must have a streamline flow (provided via a patented system). They will consist of a distribution cylinder to cut the flow speed and distribute air uniformly through the module. Convective flows will be streamlined through the combination of a honeycomb structure and perforated front. Fresh air will be spread at low velocity to avoid draught and thus eliminate disturbance to the capture and confinement of vapours.

Arched design

- The cover panels between plenums shall be arched, constructed in chrome nickel steel, material no. 1.4301, one side treated in two-step process (polished with 320 grit and brushed), minimum thickness of material 1 mm. As an option, the panels can also be constructed in chrome nickel steel coated with GSB-approved polyester powder (coloured coating thickness 80 µ, RAL colour as sample, minimum thickness of material 1 mm), or in aluminium, material AlMg 1 half-hard, natural anodised colour, E6/EV1,

minimum thickness of material 1 mm.
The panels shall be designed to fit together with an overlap to allow the panels to be serviced during cleaning operations and to prevent cooking vapours from passing through them. The panels must be able to be dismantled without tools, in order to allow easy access for maintenance in the area above the ceiling.
- Vertical ends of the ceiling vaults constructed in chrome nickel steel, material no. 1.4301, one side treated in two-step process (polished with 320 grit and brushed), minimum thickness of material 1 mm.

Lighting

The exhaust plenums shall be equipped with a lighting three-phase power rail system, suitable for 36 W or 58 W light fittings. This system makes it possible to adjust the number of lights switched on and the lighting location. Standard fittings is from the 2x58 W type, with energy-saving fluorescent tubes, 230 V/ 50 Hz, equipped with high efficiency electronic ballasts. The lighting rails shall be installed in an air and water-tight housing, closed by a 6 mm thick laminated safety glass with a matt white inner layer, equipped with special seals allowing the housing to meet the IP54 protection level. A junction box is mounted at the end of each lighting housing. The entire lighting unit can withstand temperatures of up to 90°C.

Testing & Balancing ports and air flow balancing

The kitchen ceiling must be equipped with a T.A.B.™ port for pressure testing and balancing. The flow extracted through the KSA filters and the flow used by Capture Jet™ units can be controlled by comparing pressure measurements against the curves delivered with the ceiling.

Fire Suppression System

The fire extinguishing system shall be the Ansul R-102 type and be pre-installed in the factory, by the supplier of the kitchen ventilation system. It shall protect the kitchen and prevent fire from spreading through the building using a completely automatic fire control system of the wet chemical type. The fire detection system shall be capable of detecting fire in the ceiling or cooking equipment and shall automatically discharge extinguishing liquid agent on cooking appliance areas to eliminate the possibility of reignition or re-flash, into the plenum chamber and on the exhaust duct collars. The system shall include a spring-loaded release mechanism, agent tank nozzles with blow-off caps and stainless steel appliance drops, a fusible link detector, wall-mounted emergency pull stations, a wall-mounted Automan and cabinet. The system's installation shall be carried out by an authorised representative of the system manufacturer and conform to UL 300 requirements and local codes.

Type: KCJ Manufacturer: Halton